Triple Differential 2:1 Multiplexer

MC10E457
MC100E457

TRIPLE DIFFERENTIAL 2:1 MULTIPLEXER

The MC10E457/100E457 is a 3-bit differential 2:1 multiplexer. The fully differential data path makes the device ideal for multiplexing low skew clock or other skew sensitive signals. Multiple V_{BB} pins are provided to ease AC coupling input signals.

The higher frequency outputs provide the device with a >1.0GHz bandwidth to meet the needs of the most demanding system clock.

Both, separate selects and a common select, are provided to make the device well suited for both data path and random logic applications.

The differential inputs have internal clamp structures which will force the Q output of a gate in an open input condition to go to a LOW state. Thus, inputs of unused gates can be left open and will not affect the operation of the rest of the device. Note that the input clamp will take affect only if both inputs fall 2.5V below V_{CC}.

- Differential D and Q; V_{BB} available
- 700ps Max. Propagation Delay
- High Frequency Outputs
- Separate and Common Select
- Extended 100E V_{EE} Range of –4.2V to –5.46V
- Internal 75kΩ Input Pulldown Resistors

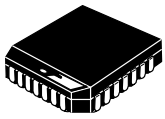

FN SUFFIX
PLASTIC PACKAGE
CASE 776-02

Pinout: 28-Lead PLCC (Top View)

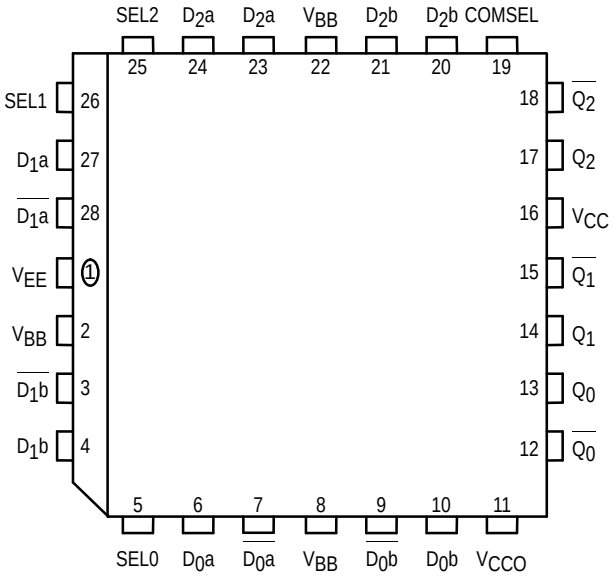

* All V_{CC} and V_{CCO} pins are tied together on the die.

PIN NAMES

Pin	Function
Dn[0:2]; $\overline{Dn}$[0:2]	Differential Data Inputs
SEL	Individual Select Input
COMSEL	Common Select Input
V_{BB}	V_{BB} Reference Output
Q[0:2], $\overline{Q}$[0:2]	Differential Data Outputs

FUNCTION TABLE

SEL	Data
H	a
L	b

LOGIC DIAGRAM

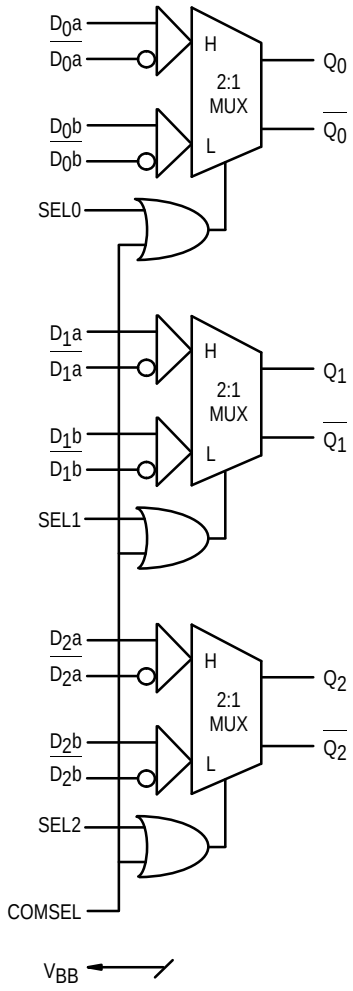

DC CHARACTERISTICS (V_{EE} = V_{EE}(min) to V_{EE}(max); V_{CC} = V_{CCO} = GND)

Symbol	Characteristic	–40°C			0°C			25°C			85°C			Unit	Cond
		Min	Typ	Max	Min	Typ	Max	Min	Typ	Max	Min	Typ	Max		
V_{BB}	Output Reference Voltage 10E	–1.43		–1.30	–1.38		–1.27	–1.35		–1.25	–1.31		–1.19	V	
	100E	–1.38		–1.26	–1.38		–1.26	–1.38		–1.26	–1.38		–1.26		
I_{IH}	Input HIGH Current			150			150			150			150	µA	
I_{EE}	Power Supply Current 10E		92	110		92	110		92	110		92	110	mA	
	100E		92	110		92	110		92	110		106	127		
V_{PP}(DC)	Input Sensitivity	50			50			50			50			mV	1
V_{CMR}	Commom Mode Range	–1.5		0	–1.5		0	–1.5		0	–1.5		0	V	2

1. Differential input voltage required to obtain a full ECL swing on the outputs.
2. V_{CMR} is defined as the range within which the V_{IH} level may vary, with the device still meeting the propagation delay specification. The V_{IL} level must be such that the peak to peak voltage is less than 1.0 V and greater than or equal to V_{PP}(min).

AC CHARACTERISTICS (V_{EE} = V_{EE} (min) to V_{EE} (max); V_{CC} = V_{CCO} = GND)

Symbol	Characteristic	0°C			0°C to 85°C			Unit	Condition
		Min	Typ	Max	Min	Typ	Max		
t_{PLH} t_{PHL}	Propagation Delay to Output							ps	
	D (Differential)	325	475	700	375	475	650		
	D (Single-Ended)	275	475	750	325	475	700		
	SEL	300	500	775	350	500	725		
	COMSEL	325	525	800	375	525	750		
t_{skew}	Within-Device Skew		40			40		ps	1
t_{skew}	Duty Cycle Skew $t_{PLH} - t_{PHL}$		±10			±10		ps	2
V_{PP}(AC)	Minimum Input Swing	150			150			mV	3
t_r/t_f	Rise/Fall Time	125	275	500	150	275	450	ps	20–80%

1. Within-device skew is defined as identical transitions on similar paths through a device.
2. Duty cycle skew is defined only for differential operation when the delays are measured from the cross point of the inputs to the cross point of the outputs.
3. Minimum input swing for which AC parameters are guaranteed.

OUTLINE DIMENSIONS

FN SUFFIX
PLASTIC PLCC PACKAGE
CASE 776–02
ISSUE D

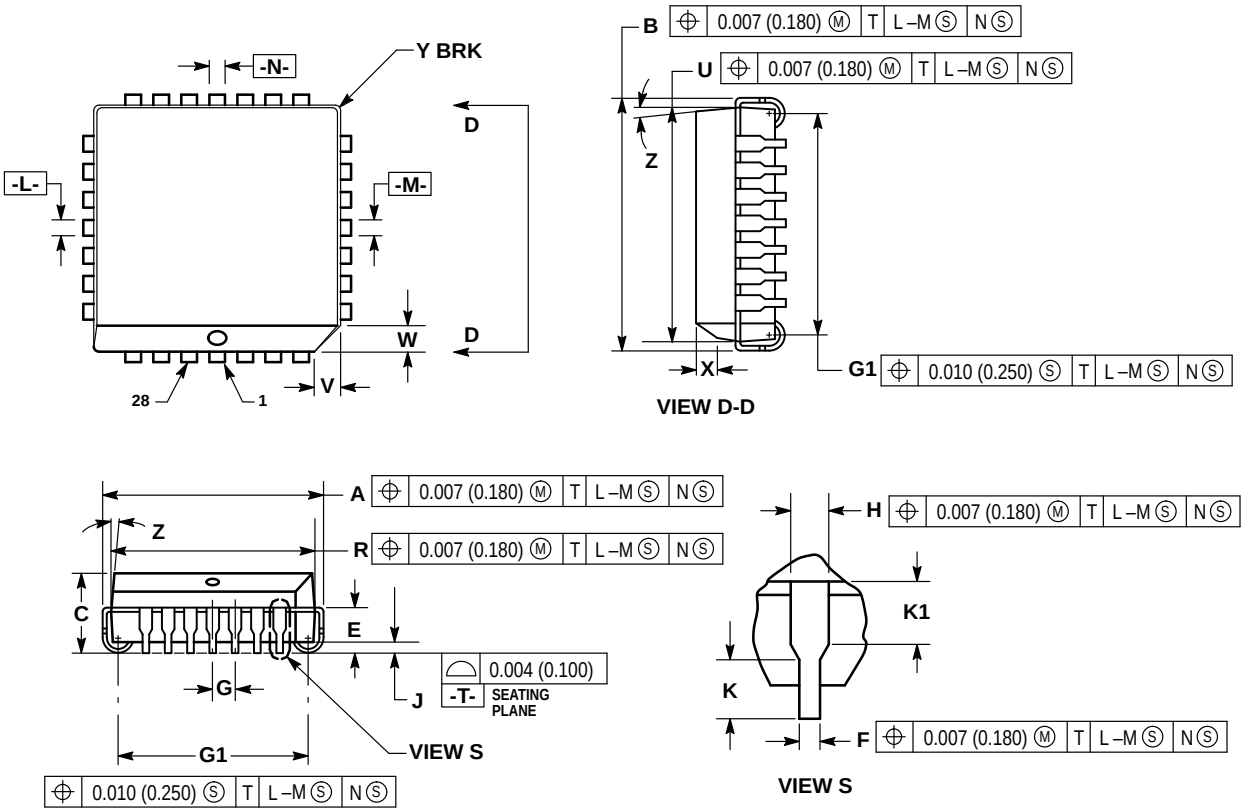

NOTES:
1. DATUMS -L-, -M-, AND -N- DETERMINED WHERE TOP OF LEAD SHOULDER EXITS PLASTIC BODY AT MOLD PARTING LINE.
2. DIM G1, TRUE POSITION TO BE MEASURED AT DATUM -T-, SEATING PLANE.
3. DIM R AND U DO NOT INCLUDE MOLD FLASH. ALLOWABLE MOLD FLASH IS 0.010 (0.250) PER SIDE.
4. DIMENSIONING AND TOLERANCING PER ANSI Y14.5M, 1982.
5. CONTROLLING DIMENSION: INCH.
6. THE PACKAGE TOP MAY BE SMALLER THAN THE PACKAGE BOTTOM BY UP TO 0.012 (0.300). DIMENSIONS R AND U ARE DETERMINED AT THE OUTERMOST EXTREMES OF THE PLASTIC BODY EXCLUSIVE OF MOLD FLASH, TIE BAR BURRS, GATE BURRS AND INTERLEAD FLASH, BUT INCLUDING ANY MISMATCH BETWEEN THE TOP AND BOTTOM OF THE PLASTIC BODY.
7. DIMENSION H DOES NOT INCLUDE DAMBAR PROTRUSION OR INTRUSION. THE DAMBAR PROTRUSION(S) SHALL NOT CAUSE THE H DIMENSION TO BE GREATER THAN 0.037 (0.940). THE DAMBAR INTRUSION(S) SHALL NOT CAUSE THE H DIMENSION TO BE SMALLER THAN 0.025 (0.635).

	INCHES		MILLIMETERS	
DIM	MIN	MAX	MIN	MAX
A	0.485	0.495	12.32	12.57
B	0.485	0.495	12.32	12.57
C	0.165	0.180	4.20	4.57
E	0.090	0.110	2.29	2.79
F	0.013	0.019	0.33	0.48
G	0.050 BSC		1.27 BSC	
H	0.026	0.032	0.66	0.81
J	0.020	—	0.51	—
K	0.025	—	0.64	—
R	0.450	0.456	11.43	11.58
U	0.450	0.456	11.43	11.58
V	0.042	0.048	1.07	1.21
W	0.042	0.048	1.07	1.21
X	0.042	0.056	1.07	1.42
Y	—	0.020	—	0.50
Z	2°	10°	2°	10°
G1	0.410	0.430	10.42	10.92
K1	0.040	—	1.02	—

How to reach us:
USA/EUROPE/Locations Not Listed: Motorola Literature Distribution;
P.O. Box 20912; Phoenix, Arizona 85036. 1–800–441–2447 or 602–303–5454

MFAX: RMFAX0@email.sps.mot.com – TOUCHTONE 602–244–6609
INTERNET: http://Design–NET.com

JAPAN: Nippon Motorola Ltd.; Tatsumi–SPD–JLDC, 6F Seibu–Butsuryu–Center,
3–14–2 Tatsumi Koto–Ku, Tokyo 135, Japan. 03–81–3521–8315

ASIA/PACIFIC: Motorola Semiconductors H.K. Ltd.; 8B Tai Ping Industrial Park,
51 Ting Kok Road, Tai Po, N.T., Hong Kong. 852–26629298